MICROWATT
Tollfree in Western Canada: 1-888-388-1592
microwatt.com • mwsales@microwatt.com
SALES • SERVICE • SUPPORT

Sorama

Sorama CAM iV64Ex

SORAMA PRODUCT SPECIFICATION SHEET AUGUST 2025 V.1

The Sorama CAM iV64Ex is designed to detect even the smallest unwanted emissions (leaks) in hazardous environments, aswell as detecting early anomalies in mechanical systems and high voltage systems (partial discharge). Powerful A.I. onboard computing enables you to check the mechanical health of any operating system.

Offering on board computing results in faster than traditional ways of performing (preventive) maintenance and/or inspections. The Sorama CAM iV64Ex reduces the time a service team is exposed in hazardous environments. Sorama offers storage and in depth analysis of the health status via the Sorama Portal, you can now monitor the performance and the trends of your industrial assets. In addition, the measurements and data output can be easily integrated in any customer ERP/MMS or in your safety & security system, via API.

- Realtime spectrum
- Far-field sound source localization and visualization
- Generation of reports using the Sorama Portal
- Leak Inspection
- Partial Discharge Inspection
- Mechanical Inspection

Sorama CAM iV64Ex

INVENTORY

Sorama CAM iV64Ex	1
Handstrap	1
Neckstrap	1
Waterproof travel case	1
Smart battery	2
Battery charger	1

Sorama CAM iV64Ex

PHYSICAL PROPERTIES

Size	358 x 173 x 170 mm 14.1 x 6.8 x 6.7 inch	L x W x D
Weight	2.6 Kg 5.7 Lb	Including battery
Connectivity	Wireless & USB-C	Dual band 2x2 802.11ac WLAN / Bluetooth 5.1
Battery	Rechargeable and replaceable battery	Battery life ±4 hours
Tripod mount	Possibility to use with a tripod for longer measurements	

STORAGE

Internal	500 Gb

DISPLAY & CAMERA

Touch display	7-inch LCD capacitive touchscreen
Display resolution	720 x 1280
Camera resolution	1280 x 960

ACOUSTICS

SNR(A-weighted @1Khz)	66dB per channel	@ 1kHz, 94dB SPL
Sensitivity	-37 ±1 dB FS	At 1 kHz, 94 dB SPL
Acoustic overload point	132.5 dB SPL	At 1 kHz, <10% THD
Auto min/max	Auto or manual, user selectable	

Sorama CAM iV64Ex

MEASUREMENT FEATURES

Frequency range	10 Hz - 120kHz
Frequency resolution	29Hz and 59Hz
Beamforming (far field)	2kHz - 60kHz, 2kHz - 120kHz
Operating distance	0.3m to 120m

DATA FORMATS

Audio + Video	.mp4
Image	.jpeg
Report	.pdf

LEAK INSPECTION

On device leak inspection can be used to determine a type of leak in a pressurized system and estimate the leak's size. This capture mode is always subjected to environmental conditions. Depending on these conditions (distance, environmental noise), values such as leak rate should be seen as indicative.
Estimated flow based on distance and noise in the environment from field-testing:

Quiet environment	0.3m to 5m	0.02l/min to 0.1l/min
	5m to 10m	0.1l/min to 0.2l/min
Noisy environment	0.3m to 5m	0.05l/min to 0.15l/min
	5m to 10m	0.15l/min to 0.3l/min

Sorama CAM iV64Ex

PARTIAL DISCHARGE INSPECTION

On device partial discharge can be used to find and identify defects in High Voltage (HV) assets. Defects can include voids, gaps, splits, physical sharp points, imperfections or discharges in the open air on/within HV assets. The defect itself discharges as it is not able to insulate the voltage applied across it.

How this defect behaves over time can be made insightful with a phase-resolved partial discharge plot (PRPD). PRPD is a powerful tool used for analyzing and diagnosing PD activity within HV insulation systems.

MECHANICAL INSPECTION

On device mechanical inspection tools can be used to identify and detect early faults in machines and assets (faulty or worn-out bearings, pump cavitation, faulty or worn-out rollers etc) over time.

Train the device on healthy machines or assets so that faults that can occur over time can be detected in advance. This allows for preventive maintenance of equipment and assets in order to keep them running and prevent any costly unplanned downtime from unexpected equipment failure.

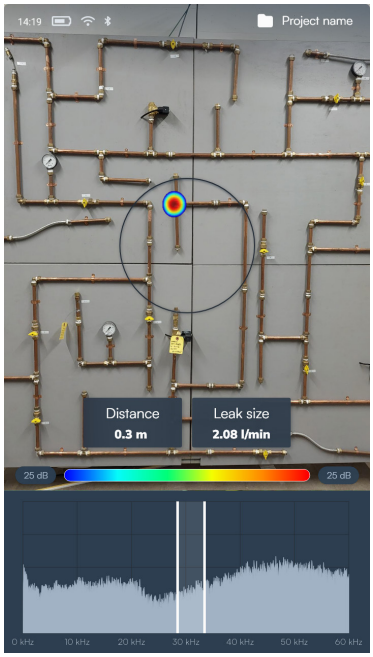

Leak Inspection

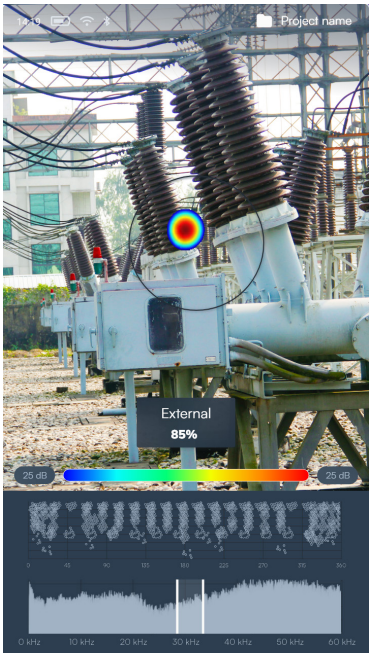

Partial Discharge Inspection

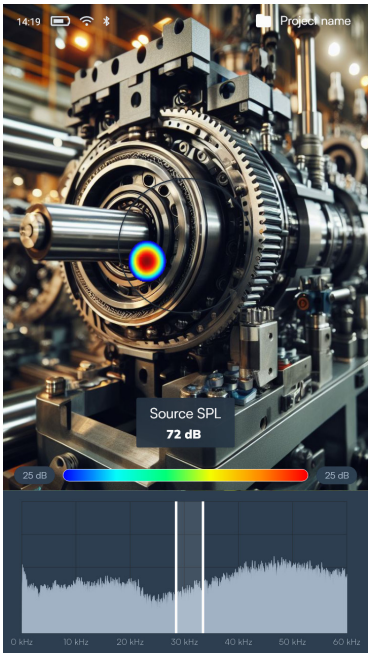

Mechanical Inspection

Sorama CAM iV64Ex

EXPLOSION SENSITIVE AREAS

Ex marking	II 3 G Ex ic IIC T4 Gc

OPERATING CONDITIONS

Temperature	-10° C to 50° C 14° F to 122° F
IP rating	54

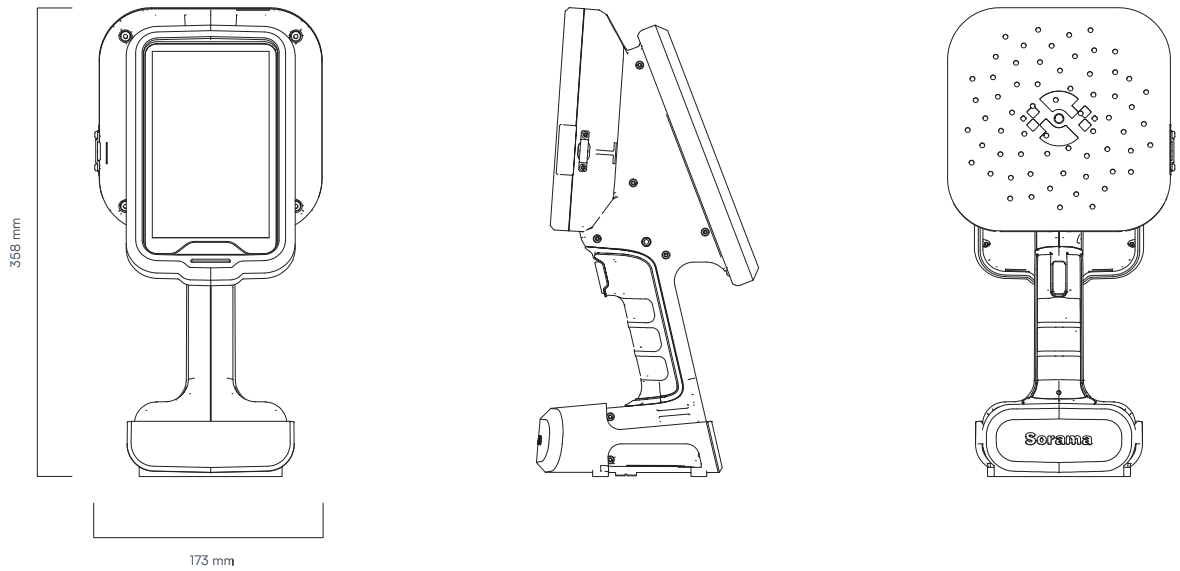

MICROWATT
Tollfree in Western Canada: 1-888-388-1592
microwatt.com • mwsales@microwatt.com
SALES • SERVICE • SUPPORT