Honeywell

# Touchpoint Pro
## Central Controller with User Interface

Specifications

### Control Module and User Interface

| Display Module and User Interface | |
|---|---|
| Part Number | TPPR-V-0852 |
| Description | Front panel User Interface Assembly |
| Supply Voltage | 24 Vdc (18-32 Vdc) |
| Power Consumption | Maximum 13 W |
| Power Dissipation | Maximum 16 W |
| Ring Communication Physical layer | Isolated RS485 |
| Ring Network Cable | 2 x 2 x 1 $mm^2$ twisted pair cable |
| Relay Outputs | 2 x System State Relays |
| Relay Contacts | Min. 12 Vdc, 10 mA |
| | Max. 5 A at 250 Vac / 30 Vdc (non-inductive) |
| Interfaces | 5.7 inch, 320x240 pixels (QVGA), Touch Screen LCD |
| | LED and Button Panel with LEDs for Power, Alarm and Fault indication. Buttons for Accept and Reset functions |
| | Buzzer for audio indication of Alarm/Faults (Sound Level: 85 dB at 100 mm) |
| | 10/100 Mbps Ethernet Interface with standard RJ-45 connector |
| | Standard SD Card Interface up to 32 GB. Supports SD cards with form factor of 24 mm x 32 mm x 2.1 mm |
| | 2 x RS-485 Modbus connections supporting maximum 115.2 kbps |
| Panel Dimension | 483 mm x 222 mm |
| Retention of Real Time Clock | 24 hours unpowered |

### Environmental

| Environmental | |
|---|---|
| Operating Temperature | -20°C to +55°C |
| Storage conditions | -20°C to +55°C |
| Operating Humidity | 10% to 90% RH (non-condensing) |
| Environmental Protection Class | Pollution Degree 2 (indoor sheltered) |
| Maximum Altitude | 2000 m |

### Input Supply

| Input Supply | |
|---|---|
| Input Voltage | 18-32 Vdc (24 Vdc nominal) |
| Allowable DC Input Voltage Ripple | 50 mVp-p (maximum) |

Honeywell

# Touchpoint Pro
## Communication/Power Rail

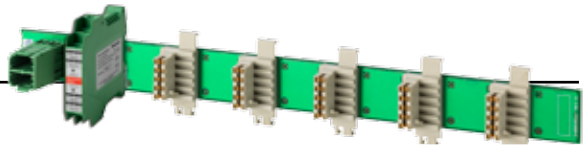

## Specifications

### Ring Coupling Module

| | |
|---|---|
| **Communication / Power Rail** | |
| Description | 5, 7, 9 or 10-way Communication / Power Rail consists of 1 DIN Rail, 1 Ring Coupling Module (RCM), and a 5, 7, 9 or 10-way Backplane |
| **DIN Rail** | |
| Total Width | 430 mm |
| Type | TS-35/15 |
| **Ring Coupling Module (RCM)** | |
| Description | Module for connection of DIN Rail mounted I/O modules to Ring Network |
| Electrical Connection | 2 x Ring Network TX / RX Driver Pairs (Each 2-Wire plus Drain) |
| Supply Voltage | 24 Vdc (18-32 Vdc) |
| Power Consumption | Maximum 1 W |
| Power Dissipation | Maximum 1 W |
| Ring Network Cable | Minimum 2 x 2 x 1 $mm^2$ twisted pair, plus Drain and Overall Screen |
| Operating Temperature | -40°C to +65°C |
| Storage Temperature | -40°C to +65°C |
| Environmental Protection Class | Pollution Degree 2 (indoor sheltered) |
| Connector Coding | Ring cable connectors (TB1-TB4) are coded with coding keys to avoid mis-wiring. |
| DIN Rail connector (Module Supply and Communication) | Maximum Current: 60 mA (18-32 Vdc) |
| **Backplane** | |
| Description | 5, 7, 9 and 10 I/O slot (excluding first slot reserved for RCM) backplane PCB for providing power and Ring Network connections to the RCM and I/O modules |
| Electrical Connection | 2-wire (+V and –V) at Power Supply Input for 5, 7, 9 I/O Slot Backplane<br>2 x 2-wire (+V and –V) at Power Supply Input for 10 I/O Slot Backplane<br>10-pin backplane connector for connection to RCM and I/O Modules |
| Maximum Wire Size | 6 $mm^2$ |
| Supply Voltage | 24 Vdc (18-32 Vdc) |
| Backplane current Rating | Maximum 20 A |
| Power Supply Connector Rating | Maximum 32 V, 41 A |
| Backplane connector | Maximum 32 V, 4.04 A |
| Environmental Protection Class | Pollution Degree 2 (indoor sheltered) |
| Operating Temperature | -40°C to +65°C |
| Storage Temperature | -40°C to +65°C |

### Communication / Power Rail

| Terminal Identification | Label | Channel |
|---|---|---|
| 1 | + | Ring A In |
| 2 | Drain | |
| 3 | - | |
| 4 | + | Ring B Out |
| 5 | Drain | |
| 6 | - | |
| 7 | + | Ring B in |
| 8 | Drain | |
| 9 | - | |
| 10 | + | Ring A Out |
| 11 | Drain | |
| 12 | - | |

# Touchpoint Pro
## Communication/Power Rail

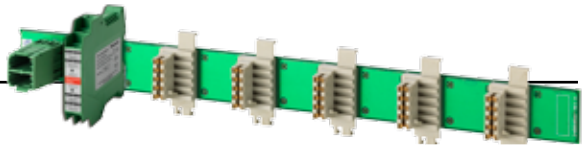

## Specifications continued

### Part Numbers

| Communication/Power Rail | |
|---|---|
| **For 19” Rack enclosure versions** | |
| TPPR-V-0520 | 5 Way Communication/Power Rail |
| TPPR-V-0525 | 7 Way Communication/Power Rail |
| TPPR-V-0530 | 9 Way Communication/Power Rail |
| **For standard Wall Mount and Floor Standing Cabinet versions** | |
| TPPR-V-0540 | 10 Way Communication/Power Rail |
| TPPR-V-0541 | 9 Way Communication/Power Rail with additional RCM |
| TPPR-V-0542 | 9 Way Communication/Power Rail with additional DIM |
| TPPR-V-0543 | 8 Way Communication/Power Rail with additional DIM and RCM |

Honeywell

# Touchpoint Pro
## Enclosures

## Specifications

| 19” 5U Rack Controller Enclosure | |
|---|---|
| Part Number | TPPR-V-0602 |
| Material | Mild Steel |
| Earthing Points | M8 (main grounding); other M6 |
| Dimensions (H x W x D) | 483 mm x 222 mm x 110 mm |
| Weight | 10 kg |

| 19” 5U Rack Remote Unit Enclosure | |
|---|---|
| Part Number | TPPR-V-0612 |
| Material | Mild Steel |
| Earthing Points | M8 (main grounding); other M6 |
| Dimensions (H x W x D) | 483 mm x 222 mm x 110 mm |
| Weight | 9 kg |

| Wall Mount Controller Enclosures | | | |
|---|---|---|---|
| Part Number | TPPR-V-1210 | TPPR-V-1220 | TPPR-V-1230 |
| Material | Mild Steel | Mild Steel | Mild Steel |
| Dimensions (H x W x D) | 600 mm x 600 mm x 300 mm | 800 mm x 600 mm x 300 mm | 1200 mm x 600 mm x 300 mm |
| Approximate Weight | 37 kg | 46 kg | 81 kg |

| Wall Mount Remote Unit Enclosures | | |
|---|---|---|
| Part Number | TPPR-V-1215 | TPPR-V-1225 |
| Material | Mild Steel | Mild Steel |
| Dimensions (H x W x D) | 600 mm x 600 mm x 300 mm | 800 mm x 600 mm x 300 mm |
| Weight | 37 kg | 46 kg |

| Floor Standing Cabinets Front Access | | | |
|---|---|---|---|
| Part Number | TPPR-V-1250 | TPPR-V-1252 | TPPR-V-1254 |
| Ventilation Type | No Ventilation | Natural Ventilation | Forced Ventilation |
| Dimensions (H x W x D) | 2000 mm x 800 mm x 600 mm | 2000 mm x 800 mm x 600 mm | 2000 mm x 800 mm x 600 mm |
| Approximate Weight | 201 kg | 201 kg | 201 kg |

| Floor Standing Cabinets Rear Access | | | |
|---|---|---|---|
| Part Number | TPPR-V-1260 | TPPR-V-1262 | TPPR-V-1264 |
| Ventilation Type | No Ventilation | Natural Ventilation | Forced Ventilation |
| Dimensions (H x W x D) | 2000 mm x 800 mm x 600 mm | 2000 mm x 800 mm x 600 mm | 2000 mm x 800 mm x 600 mm |
| Approximate Weight | 201 kg | 201 kg | 201 kg |

# Touchpoint Pro
## Enclosures

Specifications continued

### Hazardous Area Enclosure

The Touchpoint Pro range includes a wall mounted enclosure which is certified for use in hazardous areas/locations (ATEX/IECEx Zone 2, Class I Div 2, and Class I (Zone 2)). This enclosure can only be used as a remote unit, no controller option is available.

| Wall Mount Stainless Steel Div 2/Zone 2 Remote Units | |
|---|---|
| Part Number | TPPR-V-1241 |
| Material | Stainless Steel |
| Dimensions (H x W x D) | 780 mm x 510 mm x 300 mm |
| Approximate Weight | 42 kg<br>*Note: Please be aware that the weight may vary depending on the options selected.* |

Honeywell

# Touchpoint Pro
## Input/Output Modules

Specifications

### Common Specifications

| Common Specifications | |
|---|---|
| Dimensions | 35.0 mm x 99.5 mm x 114.5 mm (W x H x D) |
| Installation | 5, 7, 9 or 10-way Communication / Power Rail |
| Maximum Wire Size | 2.5 $mm^2$ |
| IP Rating | IP20 |
| EMC | EN 50270 |
| Power Supply | 18-32 Vdc (24 Vdc nominal) |
| DIN Rail Compatibility | TS-35 / 15 |
| Casing Material | Polyamide PA 6.6 V0 (UL94) |
| Operating Temperature Range | -40°C to 65°C |
| Storage Conditions | -40°C to 65°C |
| Operating Humidity Range | 10 to 90% RH (non-condensing) |
| Weight | 210 g |
| Environmental Protection Class | Pollution Degree 2 (indoor sheltered) |

### Analogue Input Module mA

| Analogue Input Module mA | |
|---|---|
| Description | 4-channel 4-20 mA Analogue Input Module with 2 or 3 wire interface to detector |
| Sensor Configuration | 4 x 2-wire or 3-wire (current sourced from detector) |
| Signal Measurement Range | 0-25 mA |
| Supply Voltage (Vs) | 24 Vdc (18-32 Vdc) |
| Field Device Supply Voltage | Supply Voltage (Vs) – 0.7 V |
| Single Channel Field Device Supply Current | Maximum 1 A |
| Total Field Device Supply Current | Total Maximum current : 2 A at 65 °C ambient<br>Total Maximum current : 4 A at 55 °C ambient |
| Power Consumption | 0.8 W (Excluding sensor supply) |
| Power Dissipation | Maximum 3.7 W, at 4 A total field device load<br>Maximum 2.1 W, at 2 A total field device load |
| Sense Resistance | 101 Ω |
| Connector Coding | Analogue Input Module connectors (TB1-TB4) are coded with coding keys to avoid mis-wiring |
| DIN Rail connector (Module Supply and Communication) | Maximum Current: 4.04 A (18-32 Vdc) |

Honeywell

# Touchpoint Pro
## Input/Output Modules

## Specifications continued

| Terminal Identification | Label | Channel | Field Device |
|---|---|---|---|
| 1 | +V | Input 1 | +24 Vdc |
| 2 | SIG | | 4-20 mA signal |
| 3 | -V | | 0 Vdc |
| 4 | +V | Input 2 | +24 Vdc |
| 5 | SIG | | 4-20 mA signal |
| 6 | -V | | 0 Vdc |
| 7 | +V | Input 3 | +24 Vdc |
| 8 | SIG | | 4-20 mA signal |
| 9 | -V | | 0 Vdc |
| 10 | +V | Input 4 | +24 Vdc |
| 11 | SIG | | 4-20 mA signal |
| 12 | -V | | 0 Vdc |

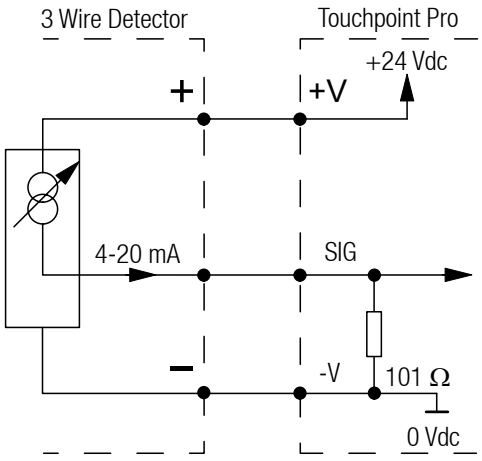


*Three wire device*

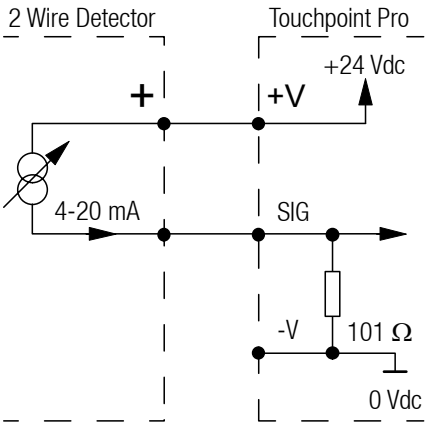


*Two wire loop powered device*

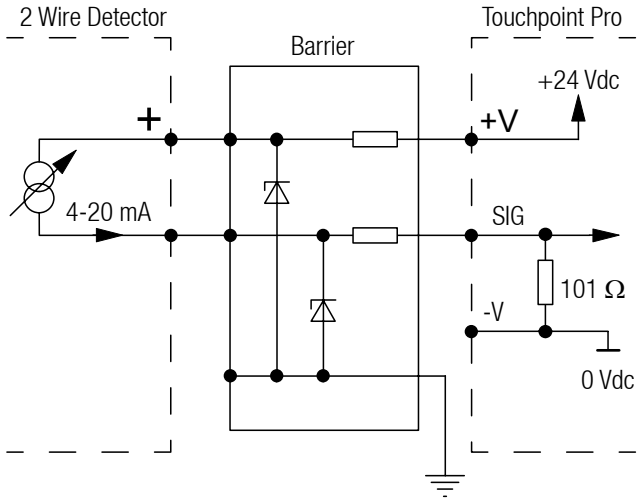


*Two wire device with a barrier*

Honeywell

# Touchpoint Pro
## Input/Output Modules

Specifications continued

### Analogue Input Module mV

| Analogue Input Module mV | |
|---|---|
| Description | 4-channel Analogue Input Module for Catalytic Bridge sensors |
| Electrical Connection | 4 x 3-wire mV-Bridge |
| Supply Voltage | 24 Vdc (18-32 Vdc) |
| Sensor Drive method | Constant current |
| Programmable Current Range | 180-360 mA |
| Maximum Loop Resistance | Total Maximum loop resistance: 40 Ω at 200 mA (including Sensor)<br>Total Maximum loop resistance: 27 Ω at 360 mA (including Sensor) |
| Input Range | ±15 mV to ±600 mV |
| Power Consumption | Maximum 1.2 W (Excluding Sensors) |
| Power Dissipation | Maximum 3.5 W |
| Connector Coding | Analogue Input Module connectors (TB1-TB4) are coded with coding keys to avoid mis-wiring |
| DIN Rail connector (Module Supply and Communication) | Maximum Current: 1.1 A (18-32 Vdc) |

| Terminal Identification | Label | Channel | Field Device |
|---|---|---|---|
| 1 | S | Input 1 | Sensitive (+) |
| 2 | 01 | | Signal |
| 3 | NS | | Non-sensitive (-) |
| 4 | S | Input 2 | Sensitive (+) |
| 5 | 01 | | Signal |
| 6 | NS | | Non-sensitive (-) |
| 7 | S | Input 3 | Sensitive (+) |
| 8 | 01 | | Signal |
| 9 | NS | | Non-sensitive (-) |
| 10 | S | Input 4 | Sensitive (+) |
| 11 | 01 | | Signal |
| 12 | NS | | Non-sensitive (-) |

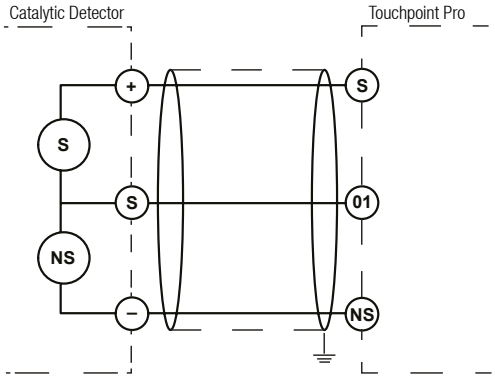


*Catalytic Detector*

# Touchpoint Pro
## Input/Output Modules

Specifications continued

### Digital Input Module

| Digital Input Module | |
|---|---|
| Description | 4-Channel Digital Input Module for switched input devices |
| Electrical Connection | 4 x 2-wire Switch Inputs |
| Supply Voltage | 24 Vdc (18-32 Vdc) |
| Power Consumption | 1 W maximum (no inputs connected) |
| Power Dissipation | 2.8 W maximum |
| Field Terminals (TB1-TB4) Ratings | Maximum current of 14 mA through switched input device at 18-32 Vdc |
| EOL (End Of Line) Resistance | 10 kΩ, 0.25 W, ±1% |
| INL (In-Line) Resistance | 2.7 kΩ, 0.25 W, ±1% |
| Switch Input Device supply Voltage (Vs) | Minimum 15 V<br>Maximum 32 V |
| Switch Input Device supply Current (Is) | Minimum 5 mA for Supervised OC/SC Switch ON condition<br>Maximum 14 mA for Unsupervised Switch ON condition |
| Connector Coding | Digital Input Module connectors (TB1-TB4) are coded with coding keys to avoid mis-wiring |
| DIN Rail connector (Module Supply and Communication) | Maximum Current: 95 mA (18-32 Vdc) |

| Terminal Identification | Label | Channel |
|---|---|---|
| 1 | + | Input 1 |
| 2 | | |
| 3 | - | |
| 4 | + | Input 2 |
| 5 | | |
| 6 | - | |
| 7 | + | Input 3 |
| 8 | | |
| 9 | - | |
| 10 | + | Input 4 |
| 11 | | |
| 12 | - | |

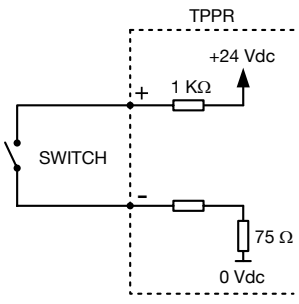


*Unsupervised configuration*

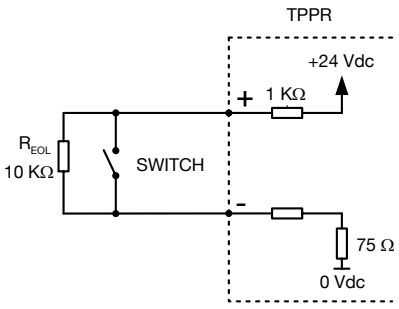


*Supervised for open circuit configuration*

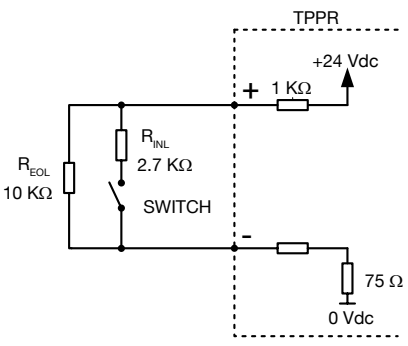


*Supervised for open and short circuit configuration*

Honeywell

# Touchpoint Pro
## Input/Output Modules

Specifications continued

### Relay Output Module

| Relay Output Module | |
|---|---|
| Description | 4-channel Relay Output Module incorporating 4 single pole change over (SPCO) relays and 24 Vdc Auxiliary Power Output |
| Electrical Connection | 4 x SPCO Relay Terminals (TB1 to TB4)<br>4 x 2-wire Auxiliary Output Terminals (TB5 to TB8) |
| Supply Voltage (Vs) | 24 Vdc (18-32 Vdc) |
| Auxiliary Supply Voltage | Supply Voltage (Vs) – 0.7 V |
| Auxiliary Supply Current | Maximum 1.5 A |
| Power Consumption | Maximum 1.5 W (excluding auxiliary power consumption) |
| Power Dissipation | Maximum 2.3 W |
| Relay Contacts (TB1-TB4) | Maximum 5 A through one relay contact at 250 Vac / 30 Vdc (non-inductive)<br>Maximum 8 A total through all four relay contacts at 250 Vac / 30 Vdc (non-inductive)<br>Minimum 12 Vdc, 10 mA |
| Connector Coding | Relay output connectors (TB1-TB4) and auxiliary output connectors (TB5-TB8) are coded with coding keys to avoid mis-wiring.<br>The relay output connectors (TB1-TB4) are coloured black to identify them for AC supply wiring |
| DIN Rail connector (Module Supply and Communication) | Maximum Current: 1.62 A (18-32 Vdc) |

| Terminal Identification | Label | Channel |
|---|---|---|
| 1 | NO | Relay 1 |
| 2 | NC | |
| 3 | C | |
| 4 | NO | Relay 2 |
| 5 | NC | |
| 6 | C | |
| 7 | NO | Relay 3 |
| 8 | NC | |
| 9 | C | |
| 10 | NO | Relay 4 |
| 11 | NC | |
| 12 | C | |
| 13 | | V Aux 1 |
| 14 | +V | |
| 15 | -V | |
| 16 | | V Aux 2 |
| 17 | +V | |
| 18 | -V | |
| 19 | | V Aux 3 |
| 20 | +V | |
| 21 | -V | |
| 22 | | V Aux 4 |
| 23 | +V | |
| 24 | -V | |

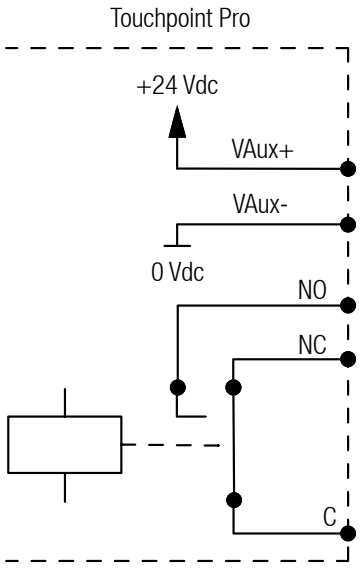


*ROM connection*

# Touchpoint Pro
## Input/Output Modules

Specifications continued

### Input and Output Modules (I/O Modules)

| Power Supplies | |
|---|---|
| TPPR-V-1000 | Analogue Input Module 4-20mA |
| TPPR-V-1010 | Analogue Input Module mV-Bridge |
| TPPR-V-1030 | Digital Input Module |
| TPPR-V-1040 | Relay Output Module |

Honeywell

# Touchpoint Pro
## Power Supplies

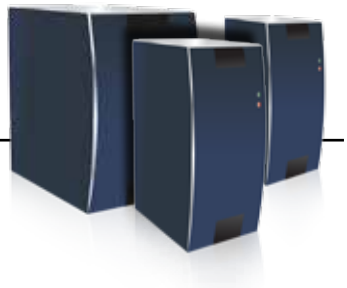

## Specifications

| Power Supply Units | | | |
|---|---|---|---|
| Power Supply | **120 W (5A)** | **240 W (10A)** | **480 W (20A)** |
| Input Voltage Range | 85 - 264 Vac; 88 – 360 Vdc | | |
| Input Frequency Range | 50 - 60 Hz ±6% | | |
| Input AC current | 1.10 A at 120 Vac<br>0.62 A at 230 Vac | 2.22 A at 120 Vac<br>1.22 A at 230 Vac | 4.56 A at 120 Vac<br>2.48 A at 230 Vac |
| Output Voltage | 24 Vdc (Adjustable 24 - 28 Vdc) | | |
| DC OK Relay contact ratings (max.) | 60 Vdc 0.3 A / 30 Vdc 1 A / 30 Vac 0.5 A resistive load | | |
| Protection | Short Circuit, Overload (current limiting), No load, Over Voltage, Over Temperature | | |
| Dimensions (W x H x D) | 40 mm x 124 mm x 117 mm | 6 mm x 124 mm x 117 mm | 82 mm x 124 mm x 127 mm |
| Operating Temperature | -25 °C to +70 °C (-13 °F to 158 °F) | | |
| Derating (60 °C to 70 °C) | 3 W/°C | 6 W/°C | 12 W/°C |
| Storage Conditions | -40 to +85 °C (-40 °F to 185 °F), 5% to 95% RH | | |
| Operating Humidity | 5% to 95% RH (non-condensing) | | |

### 120 W 24 Vdc Power Supply Unit

| Label | Purpose |
|---|---|
| N | AC Supply Neutral |
| L | AC Supply Live |
| ⏚ | Earth |

| Label | Purpose |
|---|---|
| + | DC Output +V |
| + | DC Output +V |
| - | DC Output -V |
| - | DC Output -V |
| DC OK | Relay Contact |
| DC OK | Relay Contact |

### 240 W 24 Vdc Power Supply Unit

| Label | Purpose |
|---|---|
| N | AC Supply Neutral |
| L | AC Supply Live |
| ⏚ | Earth |

| Label | Purpose |
|---|---|
| + | DC Output +V |
| + | DC Output +V |
| - | DC Output -V |
| - | DC Output -V |
| DC OK | Relay Contact |
| DC OK | Relay Contact |

# Touchpoint Pro
## Power Supplies

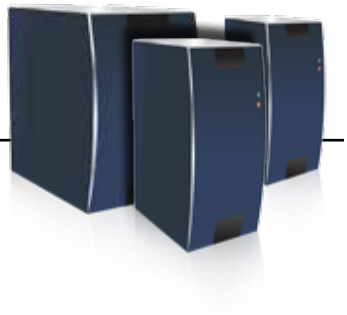

Specifications continued

### 480 W 24 Vdc Power Supply Unit

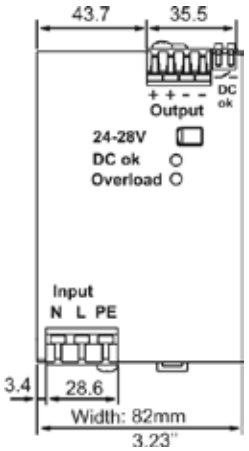


| Label | Purpose |
|---|---|
| N | AC Supply Neutral |
| L | AC Supply Live |
| ⏚ | Earth |

| Label | Purpose |
|---|---|
| + | DC Output +V |
| + | DC Output +V |
| - | DC Output -V |
| - | DC Output -V |
| DC OK | Relay Contact |
| DC OK | Relay Contact |

### Power Supply Redundancy Module (RDN Module)

| Power Supply Redundancy Module (RDN Module) | |
|---|---|
| Description | Suitable for redundant operation of 24 Vdc |
| Input Voltage Range | 8.4 - 36.4 Vdc |
| Number of Inputs | 2 |
| Input Current (max.) | 20 A per input |
| Output Reverse Voltage (max.) | 40 Vdc |
| Output Current (max.) | 40 A |
| Output Voltage Drop | 72mV typical for input: 2x10A |
| Dimension | 140mV typical for input: 2x20A |
| Operating Temperature | 36 mm x 124 mm x 127 mm (WxHxD) |
| Storage Conditions | -40 °C to +70 °C (-40 °F to 158 °F) |
| Operating Humidity | -40 °C to +85°C (-40°F to 185°F), 5% to 95% RH |
| Operating Humidity | 5% to 95% RH (non-condensing) |

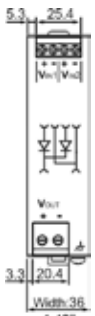


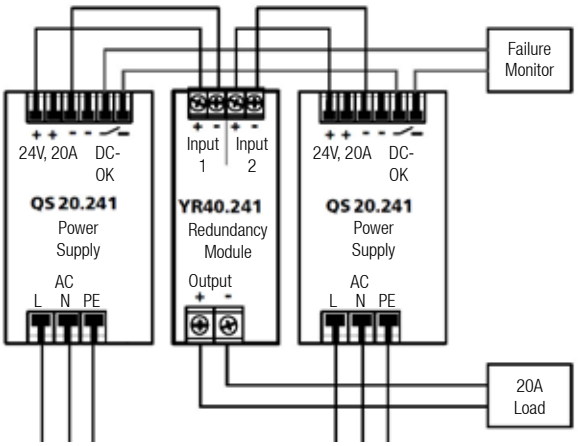


| Label | Purpose |
|---|---|
| Input 1 + | DC Supply 1 +V |
| Input 1 - | DC Supply 1 -V |
| Input 2 + | DC Supply 2 +V |
| Input 2 - | DC Supply 2 -V |
| Output + | DC Output +V |
| Output - | DC Output -V |

Honeywell

# Touchpoint Pro
## Power Supplies

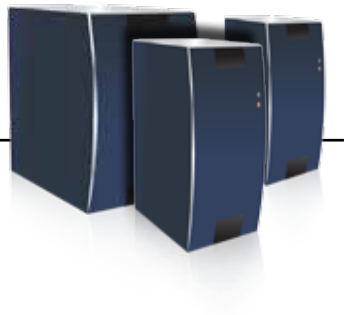

Specifications continued

### Uninterruptible Power Supply Module (UPS)

| Uninterruptible Power Supply Module (UPS) | |
|---|---|
| Description | 23.3 Vdc - 30 Vdc |
| Input Current | 70 mA typical internal current consumption<br>Current consumption for battery charging in constant current mode at 24V input<br>1.7 A typical at battery selector position <10Ah<br>3.4 A typical at battery selector position >10Ah |
| Output Voltage | 24 Vdc (nominal) in Normal Operation<br>Adjustable in Battery Operation |
| Output Current | max. 25 A in Normal Operations<br>min. 20 A in Battery Operation |
| Allowed Batteries | 2 x 12 V<br>3.9 Ah – 130 Ah<br>VRLA lead acid type |
| Dimensions (W x H x D) | 46 mm x 124 mm x 127 mm |
| Operating Temperature | -40 °C to +70 °C |
| Derating 60 °C to 70 °C | 0.5 A/°C |
| Storage Conditions | -40°C to +85°C, 5% to 95% RH |
| Operating Humidity | 5% to 95% RH (non-condensing) |

### Backup Battery

| Backup Battery | |
|---|---|
| Description | 24 V sealed lead acid battery, 12 Ah or 27 Ah options |
| Electrical Connection | 2 x 12 Vdc batteries in series |
| Dimensions (W x H x D) | 395 mm x 300 mm x 215 mm |
| Weight | 12 Ah version: 15.7 kg |
| | 27 Ah version: 25 kg |
| Operating Temperature | -20°C to +45°C |
| Operating Humidity | 10 % to 90 % RH non condensing |
| Storage Conditions | -20°C to +40°C, 10 % to 90 %RH |
| Storage Lifetime without re-charge | 18 months at <5°C, 6 months at 25°C, 3 months at 30°C, 2 months at 40°C |
| Ingress Protection | IP20, NEMA Code 1 |
| Input Voltage (charging) | 25 Vdc to 28 Vdc (UPS Supervised) |
| Output Voltage (when supplying) | 20 Vdc to 28 Vdc (dependent on charge level) |
| Maximum Input Current | 3 A |
| Maximum Output Current | 20 A |
| Environmental Protection Class | Pollution Degree 2 (indoor sheltered) |
| Battery Type | FIAMM 12 V 12 Ah FG21202 or FIAMM 12 V 27 Ah FG22703 |
| Fuse Type (inline) | Bussman 20 A Fast Acting 1.25" Type ABC-20-R |
| Current Limit Protection | Double pole circuit breaker / Isolator, 20 A |
| Maximum Altitude | 2000 m |

# Touchpoint Pro
## Power Supplies

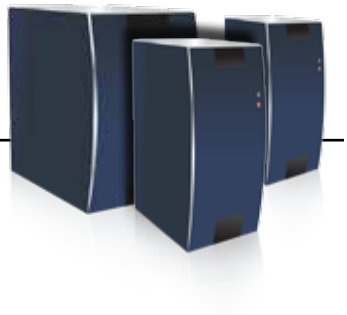

Specifications continued

### UPS and Battery Box

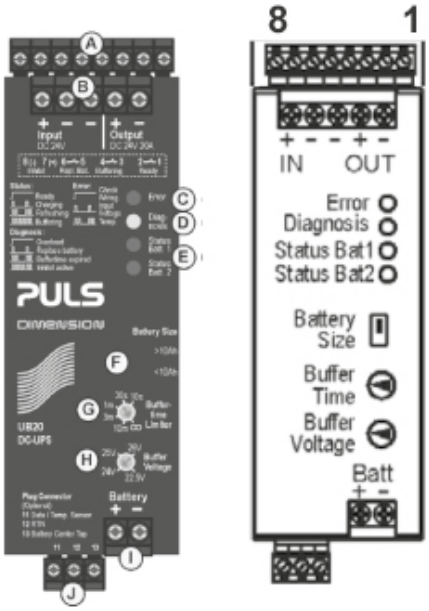


| The UPS connections are as follows: | | |
|---|---|---|
| **Terminal Identification** | **Label** | **Purpose** |
| Input DC 24 V | + | DC Supply +V |
| | - | DC Supply -V |
| | - | DC Supply -V (spare) |
| Output DC 24 V 20 A | + | +V Supply to Touchpoint Pro system |
| | - | -V Supply to Touchpoint Pro system |
| Battery | + | Battery + |
| | - | Battery - |

| The UPS is equipped with status relays as follows: | | |
|---|---|---|
| **Terminal Identification** | **Label** | **Purpose** |
| 1 | Ready | Contact is closed when both batteries are charged, all OK |
| 2 | | |
| 3 | Buffering | Contact is closed when UPS has switched to battery power |
| 4 | | |
| 5 | Replace Battery | Contact is closed when a battery quality fault is detected |
| 6 | | |
| 7 | Inhibit | DO NOT USE |
| 8 | | |

### Part Numbers

| Power Supplies | |
|---|---|
| TPPR-V-0500 | Power Supply Redundancy Module 40A |
| TPPR-V-0501 | UPS 40A DC Module |
| TPPR-V-0502 | 5A, 120W, 24 Vdc PSU |
| TPPR-V-0503 | 10A, 240W, 24 Vdc PSU |
| TPPR-V-0504 | 20A, 480W, 24 Vdc PSU |
| TPPR-V-0405 | 27Ah 24V Battery (2x27Ah 12V in series) |
| TPPR-V-0406 | 12Ah 24V Battery (2x12Ah 12V in series) |
| TPPR-V-2600 | Battery Backup Enclosure |

# Continuing support to protect your business

## Technical Services

Honeywell Analytics provides the best-quality gas detection equipment in the world so that businesses can get on with doing what they do best – running their business. Our objective is simply to take care of your safety requirements and to minimize any downtime gas safety issues. Using the best quality equipment is essential, but all equipment needs to be properly serviced and maintained. Honeywell Analytics Western Canadian partner MicroWatt LifeSafety Solutions delivers a wide range of service, support, and training to keep our cusotmers operations running safely.

MICROWATT
*Making Safety Work*

**The MicroWatt Product Support Team excels at finding solutions to technical issues and ensuring that operational uptime is maximized.**

**Preventive Maintenance**
Proper maintenance will maintain performance and enhance the bottom line. Honeywell Analytics offers a customized Preventive Maintenance Program, performed by skilled engineers, to keep equipment operating at peak performance.

**On-site Maintenance**
MicroWatt On-Site Services provide a dedicated on-call Engineer to eliminate the need to employ and train equipment support staff. Our team can respond immediately to inquiries and promptly resolve problems, minimizing downtime.

**Field Calibration**
All precision equipment must be regularly serviced, calibrated and maintained. MicroWatt Product Support offers full-service technical support for the full range of fixed and portable equipment, as well as training in the use and maintenance of our instruments.

**Field Service**
Our Field Service team is on call 24/7/365 to ensure site safety and that business performance is never compromised. We have a regional network of fully qualified and highly skilled engineers and technicians ready to meet any emergency need.

**FGS Safety LifeCycle Services**
Our LifeCycle Safety Solutions group provides a complete range of safety and engineering services for our customers including LifeCycle methodology, fire and gas detection mapping, network design, project management, system install, commissioning/testing.

**Commissioning**
For extra reassurance, systems can be installed and commissioned (or simply tested) by MicroWatt Service Engineers certified by Honeywell Analytics. Our specialists wil check for correct installation, as well as provide any training that may be required.

**Specialized Training**
MicroWatt LifeSafety Solutions offers on-site training anywhere in Western Canada, which can be customized to meet the needs of your specific equipment, site application and attendees.

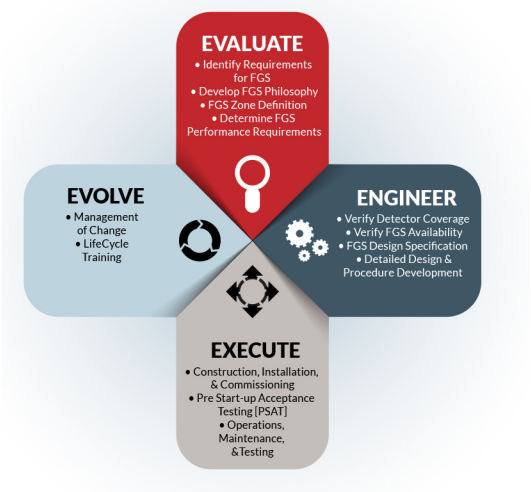


## LIFECYCLE SAFETY SOLUTIONS

MicroWatt LifeCycle Safety Solutions is a **vendor neutral**, technical arm of MicroWatt focusing on **Fire and Gas System (FGS) Safety Lifecycle development** for our clients in Western Canada and world-wide. Our world class **FGS experts in engineering and design, procurement and construction** support services can provide an **effective end-to-end solution** in any application including hydrocarbon production, power generation, minerals and metals, infrastructure and environment industries.

Contact us to learn more about **enhancing your existing lifecycle** or **an end-to-end FGS solution:**

**1.888.388.1592**
**www.microwatt.com/lifecycle**

# Honeywell Analytics Lines of Business

## Commercial

Gas detection from standalone units to fully engineered, multi-point systems, all offering cost-effective regulatory compliance

» Applications: parking structures, chillers, mechanical rooms, office towers, commercial buildings, shopping centers, swimming pools, golf courses, schools and universities, laboratories

## Industrial

Renowned Sieger and Manning gas detection systems with advanced electrochemical, infrared and open path sensing technologies

» Applications: oil and gas, cold storage, water/wastewater treatment, chemicals, engine rooms, plastics and fibers, agriculture, printing and light industrial

## High Tech/Government

A complete portfolio of gas and chemical detection instrumentation including infrared spectroscopy (MST) with no cross interference, to Chemcassette paper-based solutions (MDA Scientific) offering detection down to parts per billion

» Applications: semiconductor manufacturing and nanotechnology, aerospace propulsion and safety, specialty chemicals industry, research laboratories, emergency response

**Find out more**
www.honeywellanalytics.com

**Contact Honeywell Analytics:**


**Americas**
Honeywell Analytics, Inc.
405 Barclay Blvd.
Lincolnshire, IL 60069
USA
Tel: 847.955.8200
Toll-free: 800.538.0363
Fax: 847.955.8210
detectgas@honeywell.com

23311 La Palma Avenue
Yorba Linda, CA 92887
USA
Tel: 714.694.2700
Fax: 714.694.2701
sales@firesentry.com

www.honeywell.com



MICROWATT
Making Safety Work
Tollfree in Western Canada: 1-888-388-1592
microwatt.com • mwsales@microwatt.com



Please Note:
While every effort has been made to ensure accuracy in this publication, no responsibility can be accepted for errors or omissions. Data may change, as well as legislation, and you are strongly advised to obtain copies of the most recently issued regulations, standards, and guidelines. This publication is not intended to form the basis of a contract.


Honeywell